BARTONELLOSIS: THE HIDDEN EPIDEMIC!

Edward B. Breitschwerdt, DVM

Professor of Medicine and Infectious Diseases

CENTER FOR COMPARATIVE MEDICINE AND TRANSLATIONAL RESEARCH

North Carolina State University

College of Veterinary Medicine

DISCLOSURES-2010

- Chief Scientific Officer-Galaxy Diagnostics
- Vector-Borne Diseases Diagnostic Laboratory, NCSU
- NCSU Biosafety Level III Laboratory
- Scientific Consultant-IDEXX and Abbott Laboratories
- Research Funding-Numerous Industry Sources

RESEARCH FUNDING 2008-2010

- ACVIM FOUNDATION
- AMERICAN KENNEL CLUB
- BAYER ANIMAL HEALTH
- FORT DOGE ANIMAL HEALTH
- IDEXX LABORATORIES
- KINDY FRENCH FOUNDATION
- SIGMON TRUST FUND
- NOVARTIS ANIMAL HEALTH
- STATE OF NORTH CAROLINA
- WALTHAM

BARTONELLA SPECIES

- Gram negative, short pleomorphic rods
- **Family: BARTONELLACEAE**
  Order: **Rhizobiales**
  - Class: **Alpha Proteobacteria**
- Fastidious: Division time 22-24 hrs
- Cellular targets:
  - Erythrocytes
  - Endothelial Cells
  - Microglia Cells
  - Macrophages
  - CD34 Progenitor Cells

Kordick DL, Breitschwerdt EB: JCM 1999

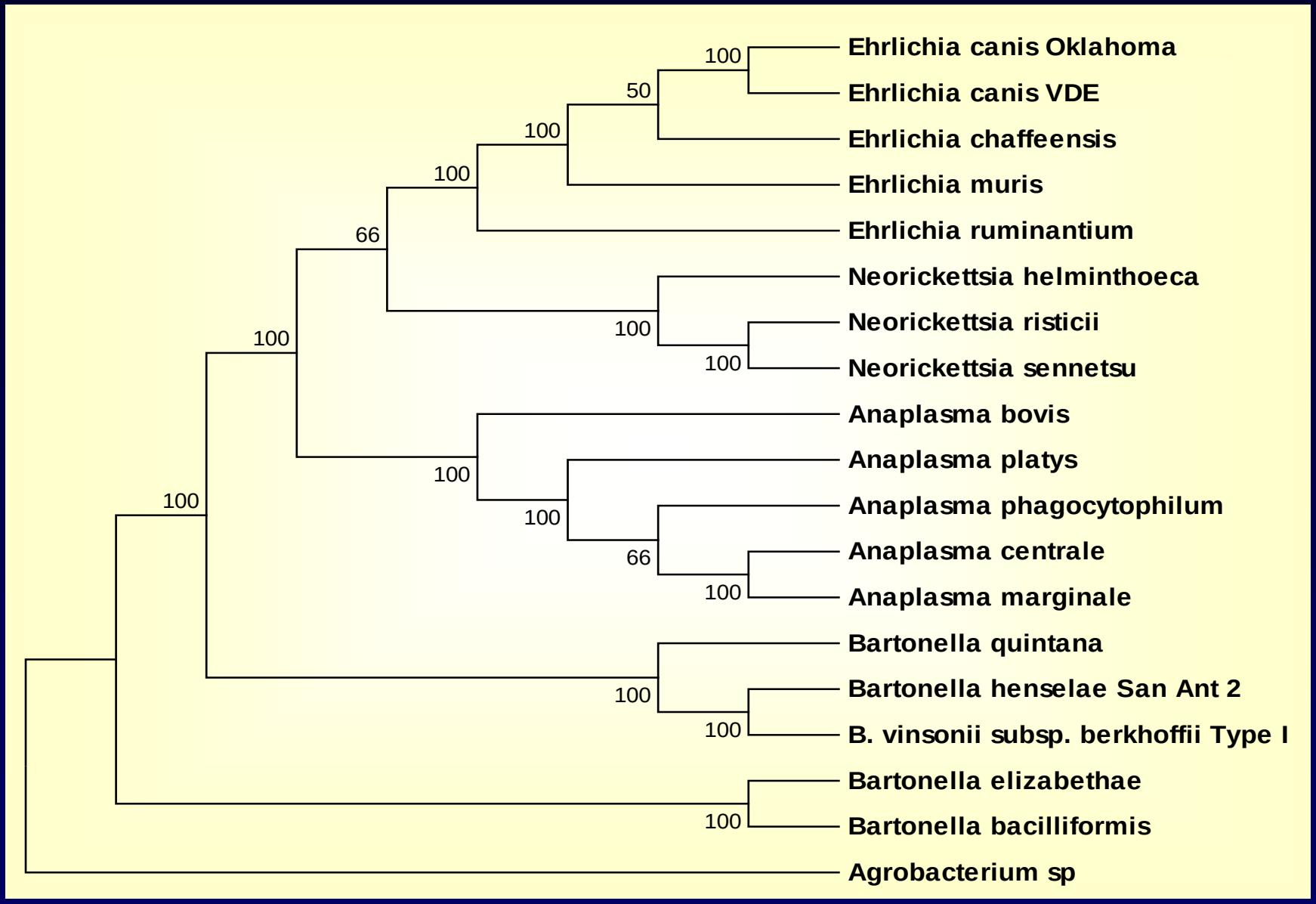

PHYLOGENETIC RELATIONSHIP OF ALPHA *PROTEOBACTERIA* BASED ON THE 16S rRNA GENE NUCLEOTIDE SEQUENCES

KNOWN VECTOR TRANSMITTED *BARTONELLA* SPP.

B. bacilliformis - sandfly, *Lutzomia verrucarum*

B. quintana - human body louse, *Pediculus humanus humanus*

B. henselae - cat flea, *Ctenocephalides felis*

B. grahamii - rodent flea, *Ctenphthalmus nobilis*

B. bovis – horn fly, *Haematobia* spp

Source: *www.earlham.edu*

TICK TRANSMISSION? HOW DO DOGS BECOME INFECTED?

YES!

- Case-based evidence. (Dogs and Humans)
- Epidemiological Data (Dogs)
- PCR Data (Ticks)

YES/Maybe!

- **V**ector transmission of *Bartonella henselae* by *Ixodes ricinus.* EID, 2008.

Billeter SA, Levy MG, Chomel BB, Breitschwerdt EB: Vector Transmission of *Bartonella* species with emphasis on the potential for tick transmission. Med & Vet Entomol 22: 2008.

BARTONELLA: RESERVOIR HOSTS

Reservoirs:

- Rodents
- Cats
- Dogs
- Wildlife
- Ruminants
- Human beings
- Others

RODENT *BARTONELLA* SPECIES

<u>Emerging Infect Dis 2009</u>

Exotic Pet Rodents

N=546 mice, rats, gerbils, squirrels, chipmuncks

Originated 8 Countries

- 367 Wild Capture
- 179 Bred Captivity

Overall Prevalence 26%

- 37% of Wild Capture
- 3% Breeder Facility

Isolated from 17/28 Animal Species

Co-infection 18%

53 Genotypes, 10 groups

BARTONELLA INFECTION IN CATS

- Domestic cats are the main reservoir for *Bartonella henselae* and *B. clarridgeiae*. Three other *Bartonella* species have been isolated from domestic cats: *B. koehlerae, B. bovis* (*B. weissii*) and *B. quintana*.

- Free-ranging and captive wild felids are also infected with different *Bartonella* species or subspecies.

CAT SCRATCH DISEASE
Russell Regnery, 1992

INOCULATIION PAPULE

LYMPHADENOPATHY

CSD AND CHRONIC INFECTION

(Kordick DL, et al JCM 33: 3245-3251, 1995)

TIME (MONTHS) (⊕ Bh blood culture ⊖ Bh blood culture)

CAT	PATIENT	0	1	2	3	4	5	6	7	8	9	10	11	12	13	14	15	16	17	18	19	20	21	22	23	24
A	1							⊕			⊕	⊕	⊖		⊖		⊖	⊖		⊖						
B	2,3*			⊕			⊕	⊕		⊕		⊕	⊕		⊖		⊖									
C	4			⊖																						
D,E,F,G,H,I	5							⊕			⊕						⊕			⊕						
J	6				⊕																					
K	7																	⊖								
L	8						⊕			⊕				⊕			⊕		⊕		⊕					
M	9			⊕																						
N	10		⊖		⊕			⊕																		
O	11		⊕																							
P	12					⊕	⊕		⊕		⊕	⊕		⊕	⊕											
Q	13				⊕				⊕																	
R,S	14																						⊕			

NCSU-CVM BMC

FLEAS, CATS AND *BARTONELLA* SPECIES

- *B. henselae*
- *B. clarridgeiae*
- *B. koehlerae*
- *B. bovis?*
- *B. quintana?*

FLEA CONTROL!

Pet/Flea Cycle

Wildlife/Pet/Flea Cycle

Dr. Stephen Jaffee

RELAPSING BACTEREMIA

Kordick DL, Breitschwerdt EB: AJVR 58: 492-497,1997

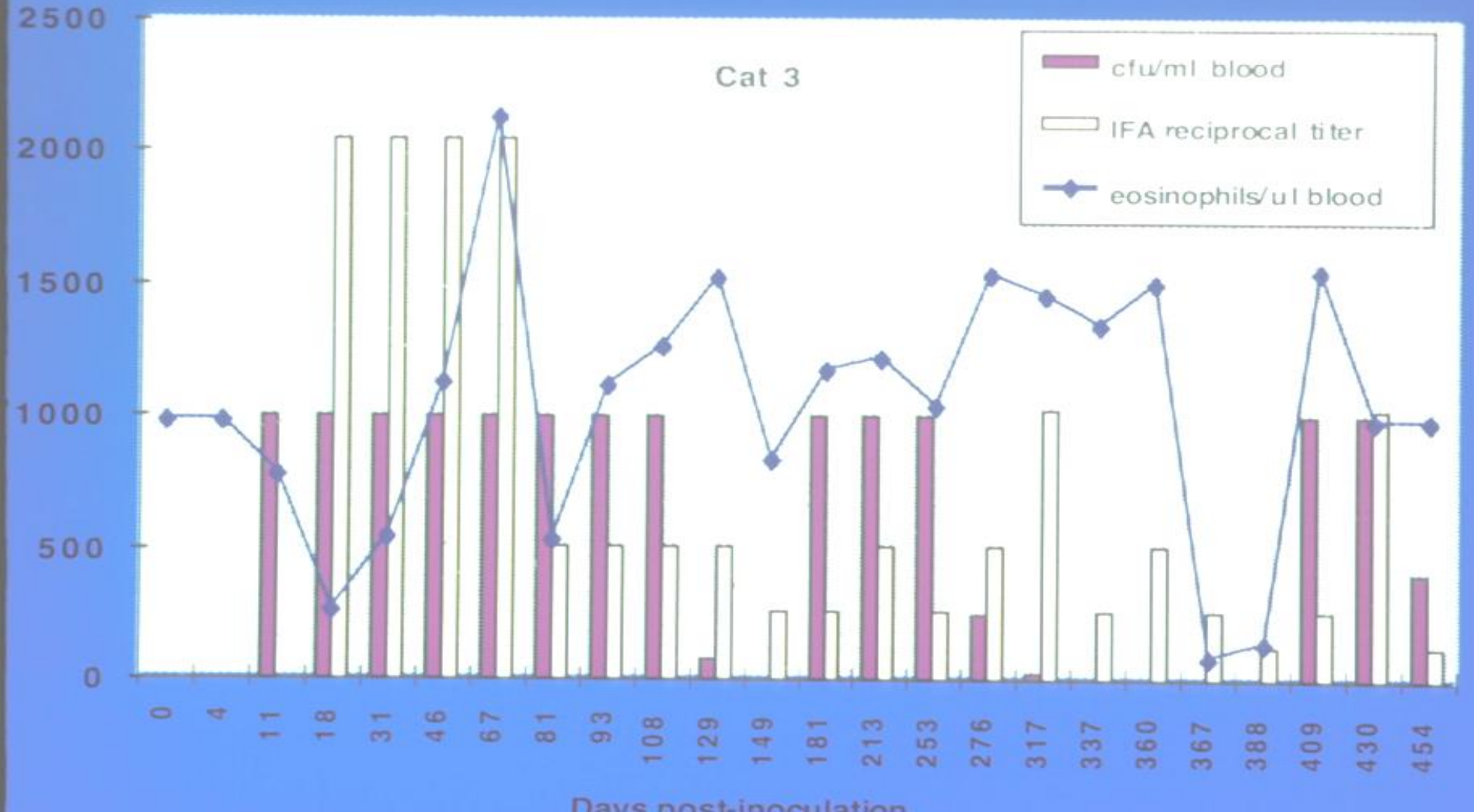

BARTONELLA HENSELAE

Chronic Relapsing Bacteremia

Kordick DL, Breitschwerdt EB: JCM 37: 1536, 1999

Flea Transmission

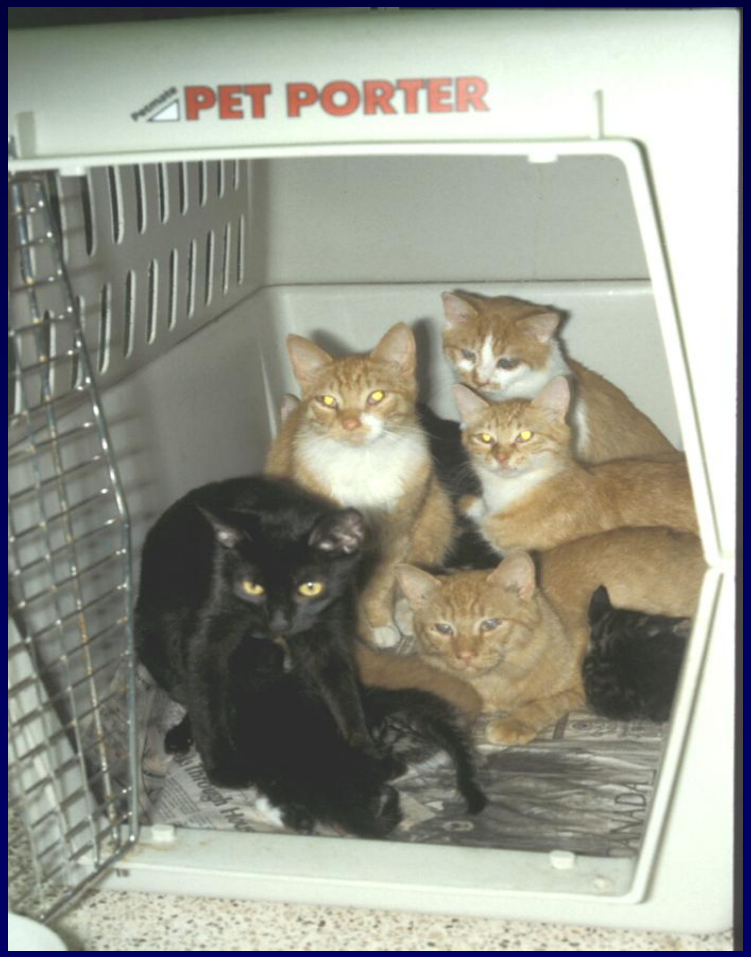

ATYPICAL CAT SCRATCH DISEASE (11%)

Granulomatous Hepatitis

Osteolysis

Atypical Pneumonia

Hilar Adenopathy

Pleural Effusion

Thrombocytopenic Purpura

BARTONELLA OSTEOMYELITIS IN A CAT

Varanat M, et al. J Vet Intern Med 13:48, 2009

Rt 5th Metacarpal

Lt Radial Carpal Osteolysis

BARTONELLA HENSELAE AND *B. VINSONII* SUBSP. *BERKHOFFII* IN DOGS WITH IDIOPATHIC EFFUSONS

Dog number	Sample Source	Fluid Analysis	Diagnosis
1	Thorax	Chylous	Idiopathic Chylothorax
2	Abdomen	Transudate	Lymphangiectasia
3	Thorax	Modified Transudate	Restrictive Pericarditis
4	Stifle Joint	Mononuclear Neutrophils	Idiopathic Polyarthritis

BARTONELLA ENDOCARDITIS

HUMAN	YEAR
B. quintana	93
B. elizabethae	93
B. henselae	93
B. washoensis	98
B. vinsonii arup.	99
B. vinsonii berk.	00
B. koehlerae	04
B. alsatica	05
B. mayotimonensis	10

CANINE	YEAR
B. vinsonii (berkhoffii)	*95*
B. clarridgeae	01
B. washoensis	03
B. quintana	05
B. henselae	09
B. koehlerae	09
B. rochalimae	09

BVB GENOTYPE I: HISTORICAL PROGRESSION

- Polyarthritis
- Wt Loss, Seizures, Vasculitis
- Epistaxis
- Endocarditis

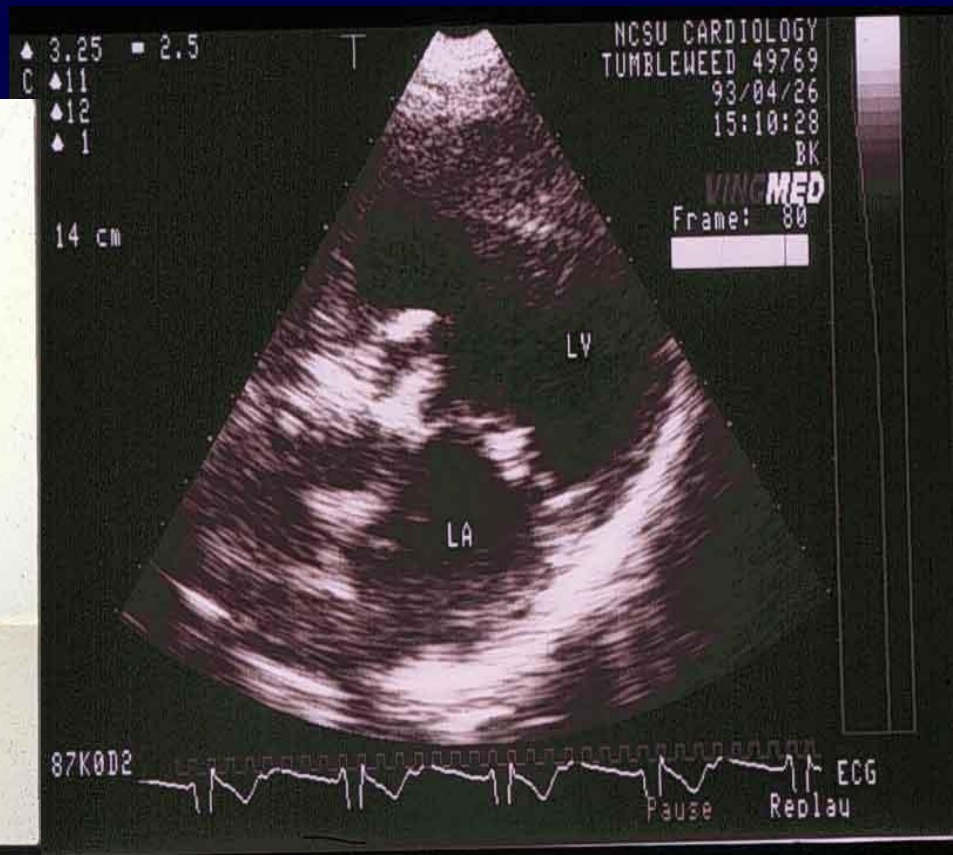

BARTONELLA VINSONII SUBSP. *BERKHOFFII* & HUMAN INFECTION

Father 52 year-old male veterinarian

- Progressive weight loss (HIV/cancer?)
- Muscle weakness, Incoordination
- Poorly defined vascular lesion MRI

Daughter 12 year-old, previously healthy

- Headache, muscle pain, insomnia

Mother- BAPGM blood culture negative

Two Sons- BAPGM blood culture negative

Breitschwerdt EB, et al. Parasites and Vectors Online, 2010

CO-INFECTION: *B. VINSONII* & *B. HENSELAE*

Sample Source /Date: FATHER	Direct	Enrichment Culture	Isolate
Blood 10/18	***Bvb* II**	Neg	Neg
Blood 11/5 CSF 11/5	Neg Neg	***Bvb* II** ***Bvb* II**	Neg
Oral Swab 12/11* Saliva	***Bvb* II** **B spp**	NA NA	NA NA
Bld ACD 1/18 Bld EDTA 1/18	Neg Neg	***Bh* (H1)** ***Bh* (H1)**	Neg Neg

Breitschwerdt EB, et al. Parasites and Vectors Online, 2010

OCCULT INFECTION: *B. VINSONII* SUBSP *BERKHOFFII*

Sample Source /Date: Daughter	Direct	Enrichment Culture	Isolate
Blood 11/07	Neg	***Bvb* II**	Neg
Blood 11/28*	Neg	***Bvb* II**	Neg
Serum 11/28	Neg	***Bvb* II**	Neg
Blood 01/11	Neg	***Bvb* II**	***Bvb* II**
Blood 03/20	Neg	***Bvb* II**	Neg
Serum 03/20	Neg	Neg	Neg

Breitschwerdt EB, et al. Parasites and Vectors Online, 2010

IMMUNOSUPPRESSIVE DRUG THERAPY

- Patient Consequences
- Laboratory Consequences

COMPARATIVE DISEASE FEATURES OF BARTONELLOSIS

	Canine	Human
Peliosis hepatis	+	+
Bacillary angioma	+	+
Endocarditis	+	+
Myocarditis	+	+
Granulomatous		
Lymphadenitis	+	+
Hepatitis	+	+
Encephalitis	+	+
ITP/IMHA	+	+

CANINE BARTONELLOSIS

<u>UC Davis Study:</u> (Henn JB, et al. AJVR 2005)

3,417 Sick Dogs

102 Cases (3%) by ELISA *Bvb, Bcl, Bh*

203 Case controls

Herding Dogs and Females

35% *Bh*

33% *Bcl*,

2% *Bvb,*

29% More than one antigen

<u>Lameness, Arthritis, Nasal Discharge/Epistaxis, Splenomegaly</u>

CULTURE OF *BARTONELLA* SPECIES IN DOG BLOOD SAMPLES (N=51)

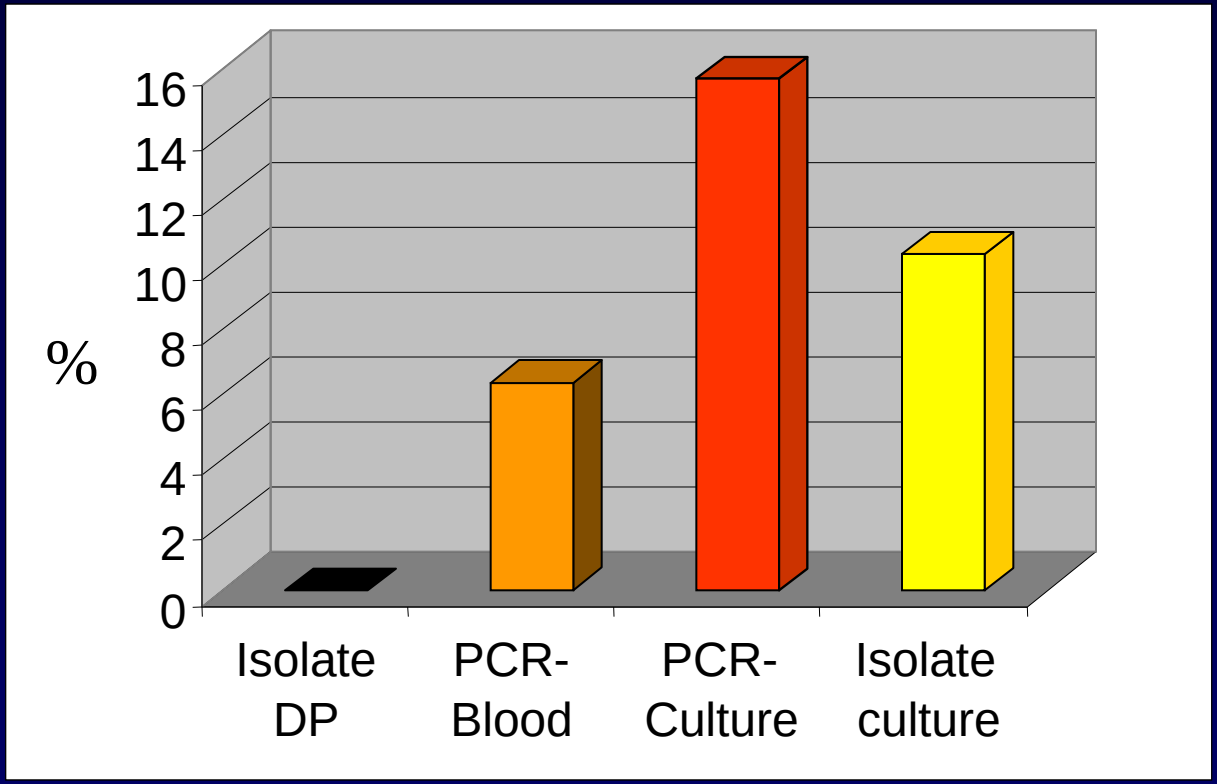

DP: direct plating

P= 0.015
(McNemar contingency test)

BARTONELLA SPP. DETECTION AND ISOLATION USING BAPGM

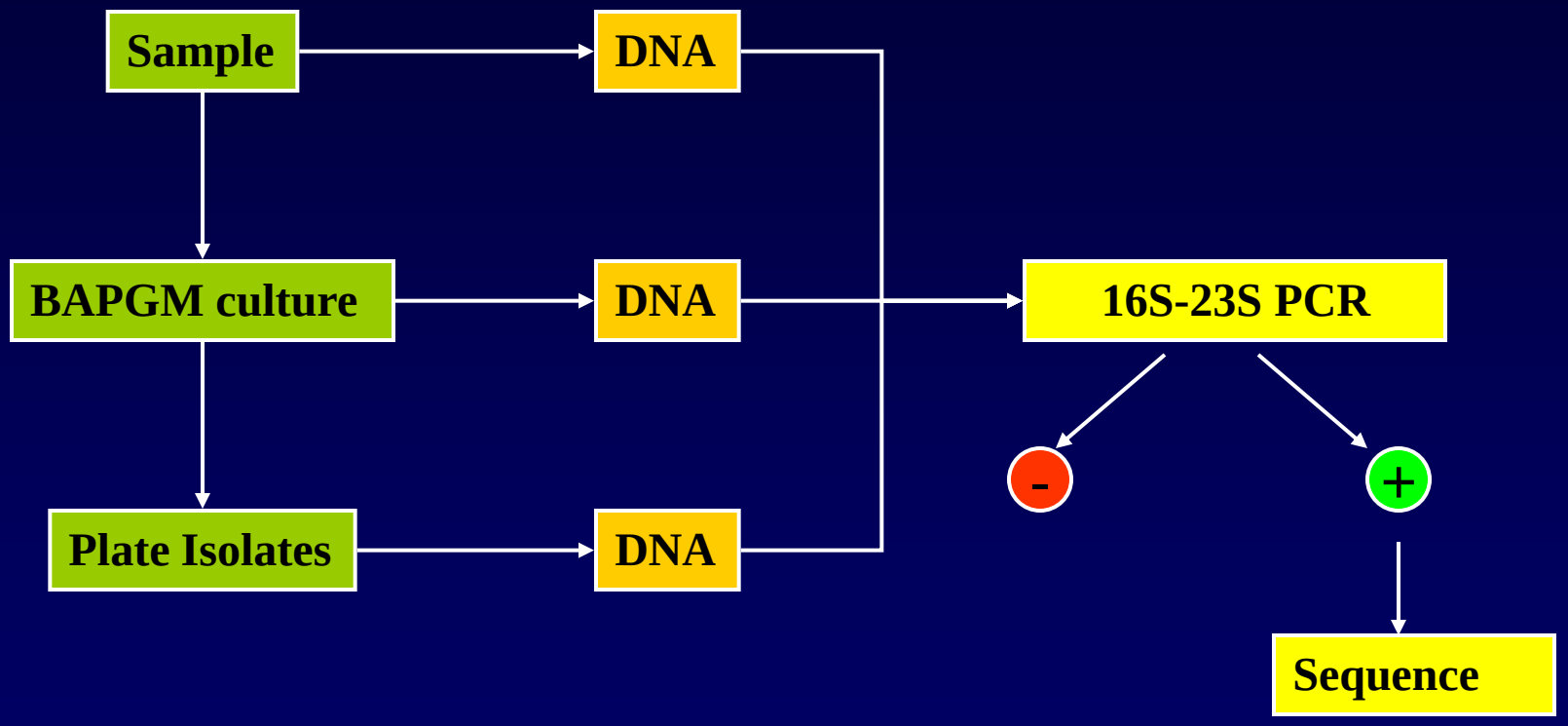

Ducan AW, et al: J Microbiol Methods 69:273-81, 2007

CANINE BARTONELLOSIS

Perez C, et al Abstract ACVIM Forum, 2010

- 924 BAPGM enrichment cultures- from 663 dogs
- 61 Dogs (9.2%) infected with a *Bartonella* species
- *Bartonella henselae-* 49%
- *B. vinsonii* subsp. *berkhoffii* - 28%
- *Bartonella koehlerae*- 3% (*Bb, Bvl*)
- Co-infection- 18% (*Bh* & *Bvb*)
- Seroreactivity: *Bh 25% Bvb* 50%

ENHANCED MOLECULAR DETECTION OF *BARTONELLA*

BAPGM Platform (NCSU IRB approved study), PCR (ITS region) and DNA sequencing

Patients n=294 (Arthropod and animal contact)

Controls n=56 (Low exposure group)

Patients= 31.9% *Bh, Bq, Bmel, Bk, Bvb* I&II, *B. volans*-like, Co-infections with *Bh & Bvb*

Controls= 0.0%

Mascarelli P, Maggi R, et al. Abstract #32, American Society of Rickettsiology, 2010

GALAXY DIAGNOSTICS

www.galaxydx.com

Chief Scientific Officer

New Company devoted to diagnostic detection of *Bartonella* spp. and other fastidious bacteria.

Breitschwerdt EB, Sontakke S. US Patent # 7,115,385 Media and Methods for Cultivation of Microorganisms. Issued October, 2006

Transfer of BAPGM isolation approach to CDC and Duke University Medical Center

Kosoy M, et al. *Bartonella tamiae* isolated from patients from Thailand JCM, 2008

BARTONELLA SPP. AS AN OCCUPATIONAL RISK

- Sex: 12 females/2males
- Age: 30-53 years
- Occupations: 5 veterinarians, 5 veterinary assistants, 1 veterinary researcher, 1 cattle rancher, 2 wildlife biologists
- Occupational animal contact for >10 years
- All reported animal bites or scratches
- All reported frequent arthropod exposure

Breitschwerdt EB, et al: Emerg Infect Dis 13: 938-41, 2007

BARTONELLA SPP. AS AN OCCUPATIONAL RISK

Self assessment: 9/14 reported chronic illness, 5 reported infrequent, recurrent illness.

Symptoms:

Fatigue	13	Sensation Loss	7
Joint Pain	10	Balance Problems	7
Insomnia	9	Headache	7
Muscle Pain	8	Tremors	6
Memory Loss	8	Syncope	5

Breitschwerdt EB, et al: Emerg Infect Dis 13: 938-41, 2007

BAPGM HUMAN ISOLATION RESULTS (n=14)

Sample Source	*B.henselae*	*B. vinsonii* (*berkhoffii*)	Co-infection *Bh/Bvb*
Veterinarian	3	1	1
Veterinary Assistant	2	2	1
Rancher	--	--	1
Researcher	1	--	--
Biologist	1	1	--

ACKNOWLEDGEMENTS

- Colleagues
- VBDDL Staff
- Internal Medicine Residents
- Barbara Hegarty
- Ph.D. Graduate Students
  - Dr. Dorsey Kordick
  - Dr. Brandee Pappalardo
  - Dr. Jiraporn Suksawat
  - Dr. Adam Birkenheuer
  - Dr. Linda Kidd
  - Dr. Ashlee Duncan

Center for Comparative Medicine and Translational Research